GIGALIGHT Marketing Report

Let's Begin the New Journey of Outdoor Base Stations, Together with Advanced 5G Fronthaul Applications.

2022 Q2 Vol.2

New Products

In May 2022, GIGALIGHT officially announced the launch of three products – 50G SFP56 LR, 50G SFP56 ER, and 50G SFP56 DWDM transceivers, for 5G fronthaul.

The newly launched 50G optical modules feature the advantages of high bandwidth, low cost, high port-density and low power consumption.

50G SFP56 LR/ER Transceivers

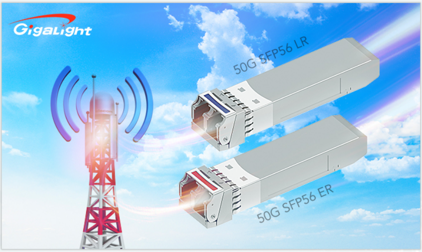
50G SFP56 LR
50G SFP56 ER

The 50G SFP56 LR and 50G SFP56 ER optical modules both adopt the TO scheme with telecom-grade airtightness.

The 50G SFP56 ER adopts EML and APD to support a maxmium transmission distance of 40km and its power consumption is less than 3.5W.

The 50G SFP56 LR adopts EML and PIN to support a maxmium transmission distance of 10km and its power consumption is less than 3W.

50G PAM4 SFP56 DWDM Transceivers

Gigalight
5G
Building 5G Network with Higher Bandwidth & Higher Capacity
50G SFP56 DWDM Transceivers
50G

The 50G PAM4 SFP56 DWDM transceivers (full C-band with 50GHz spacing) adopts the SFP56 form factor (the same size as SFP+ and SFP28), with which the 5G fronthaul can be upgraded to 50G per port directly without changing the network architecture.

The 50G SFP56 DWDM modules adopt 50G PAM4 on both the optical and electrical sides, DWDM EML to support a maxmium transmission distance of 6km (direct transmission) or 80km (with DCM and EDFA).

With the support of GIGALIGHT's 50G SFP56 DWDM transceivers, the total capacity of 5G fronthaul network on a single fiber can reach up to 4.8Tb/s (96×50Gb/s).

The Milestones of GIGALIGHT's 5G Products

GIGALIGHT's 5G products include optical transceivers, passive WDMs and transmission subsystems, supporting 10G/25G/50G rates and commercial-grade and industrial-grade applications.

Along with the opening trend of 5G, the GIGALIGHT's 5G product line is showing its first glory after years of research and development.

5G
Gigalight

Timeline
development history

Moving Forward with GIGALIGHT

2022

HAOC

Jan 4, GIGALIGHT launched a series of HAOC for outdoor 5G base stations.

FOE2021

2021

Oct 13, GIGALIGHT exhibited 5G Open RAN solutions at FOE 2021.

2021

PT2021

Sep 22, GIGALIGHT exhibited 5G optical device solutions at PT2021.

PT2020

2020

Sep 28, GIGALIGHT exhibited 5G optical transceivers and passive WDMs at PT2020.

2020

Relevant Qualification Licenses

Apr 28, GIGALIGHT's 10G CWDM/DWDM and 25G CWDM/LWDM industrial-grade transceivers successfully passed the test of Wuhan Wangrui Laboratory and obtained the relevant qualification license, indicating that this series of products can be fully applied in batches in the telecommunications equipment market.

MIIT Network Entry Certificate

2020

Mar 13, certification test and received the MIIT Network Entry Certificate with No.28-D963-200337.

2019

5G OMUX WDM Products

May 8, GIGALIGHT firstly launched 5G OMUX products, which can be applied in the DU and AAU segments of 5G fronthaul network. The 5G OMUX successfully completed the interfacing test with Huawei's 5G fronthaul equipment at a domestic operator. The test results fully meet the construction requirements of the 5G projects and solve the problem of optical fiber connection for the high-density 5G base stations.

5G Product Line

2018

GIGALIGHT delivered 5G OMUX in batches to South Korea.

Brand Sale

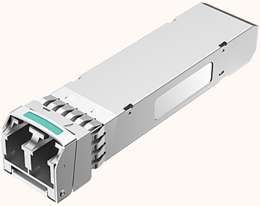

10G CWDM SFP+

- ✓ 1271-1611nm fixed wavelengths options
- ✓ Up to 80km

From **$28**

Order Now >

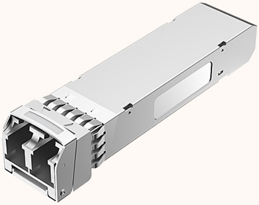

10G DWDM SFP+

- ✓ C-band fixed and tunable wavelengths options
- ✓ Up to 80km

From **$115**

Order Now >

New Technology Insights

Next-generation DWDM Transceivers Based on PAM4

The modulation rate of DWDM technology is getting higher and higher. Recently, the 50G PAM4 and 100G PAM4 technologies have been introduced to compete with the 100G/200G coherent DWDM technologies for market share by the advantage of low cost.

The next-generation PAM4 DWDM products are based on three technologies – 50G (1x50G PAM4), 100G (2x50G PAM4), and 100G (1x100G PAM4).

50G (1x50G PAM4)

- 50G SFP56 DWDM transceivers based on EML
- C-band 50GHz spacing
- Up to 80km with the support of DCM and EDFA
- Single-fiber capacity of 4.8Tb/s (96x50Gb/s)
- 1x50G PAM4 electrical interface
- 1x50G PAM4 optical interface
- Duplex LC

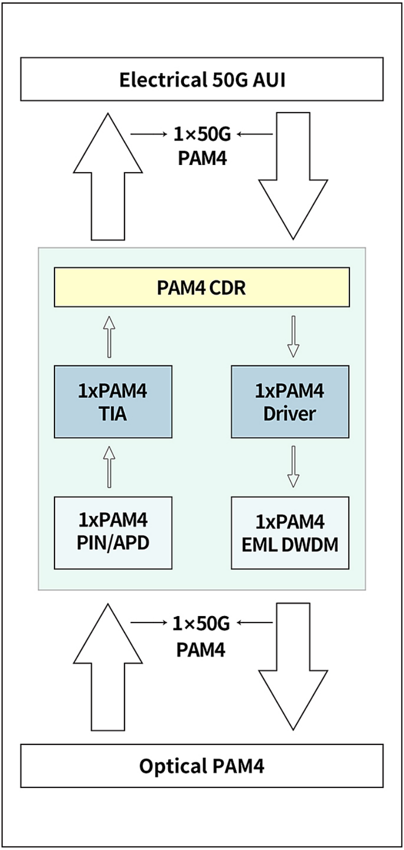
Electrical 50G AUI
1×50G
PAM4
PAM4 CDR
1xPAM4
TIA
1xPAM4
Driver
1xPAM4
PIN/APD
1xPAM4
EML DWDM
1×50G
PAM4
Optical PAM4

100G (2x50G PAM4)

- 100G QSFP28 DWDM transceivers based on EML
- C-band 50GHz spacing
- Up to 80km with the support of DCM and EDFA
- Single-fiber capacity of 4.8Tb/s (96x50Gb/s)
- 4x25G NRZ electrical interface
- 2x50G PAM4 optical interface
- Dual CS or duplex LC

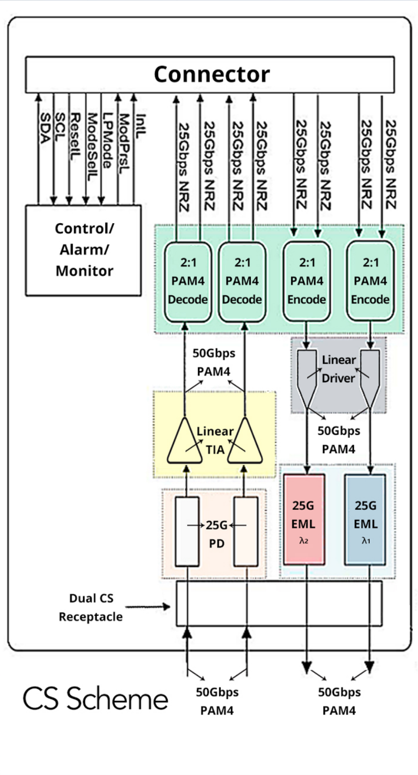
Connector
SDA
SCL
ResetL
ModeSelL
LPMode
ModPrsL
IntL
25Gbps NRZ
25Gbps NRZ
25Gbps NRZ
25Gbps NRZ
25Gbps NRZ
25Gbps NRZ
25Gbps NRZ
25Gbps NRZ
Control/ Alarm/ Monitor
2:1 PAM4 Decode
2:1 PAM4 Decode
2:1 PAM4 Encode
2:1 PAM4 Encode
50Gbps PAM4
Linear Driver
Linear TIA
50Gbps PAM4
25G PD
25G EML λ2
25G EML λ1
Dual CS Receptacle
50Gbps PAM4
50Gbps PAM4

CS Scheme

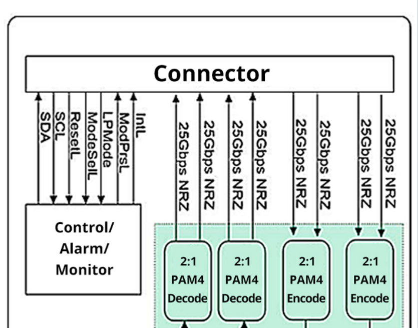
Connector
SDA
SCL
ResetL
ModeSelL
LPMode
ModPrsL
IntL
25Gbps NRZ
25Gbps NRZ
25Gbps NRZ
25Gbps NRZ
25Gbps NRZ
25Gbps NRZ
25Gbps NRZ
25Gbps NRZ
Control/ Alarm/ Monitor
2:1 PAM4 Decode
2:1 PAM4 Decode
2:1 PAM4 Encode
2:1 PAM4 Encode

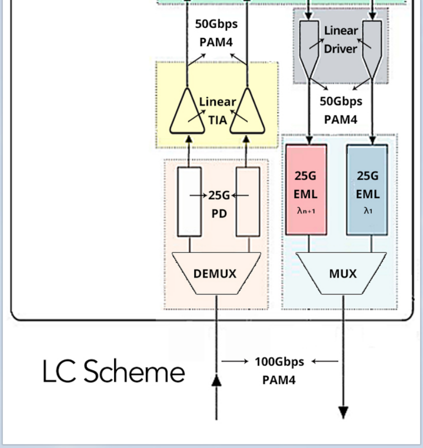
50Gbps
PAM4
Linear
Driver
Linear
TIA
50Gbps
PAM4
25G
PD
25G
EML
λn+1
25G
EML
λ1
DEMUX
MUX
LC Scheme
100Gbps
PAM4

100G (1x100G PAM4)

- 100G QSFP28 DWDM transceivers based on Silicon Photonics
- C-band 100GHz spacing
- Up to 80km with the support of DCM and EDFA
- Single-fiber capacity of 4.8Tb/s (48x100Gb/s)
- 4x25G NRZ electrical interface
- 1x100G PAM4 optical interface
- Duplex LC

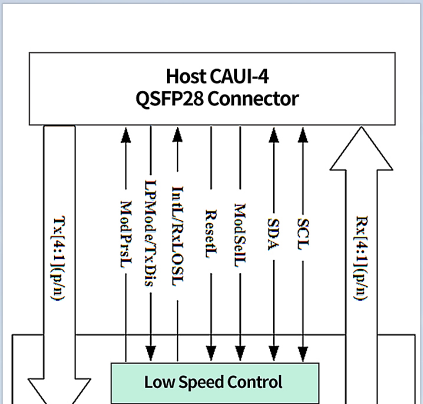
Host CAUI-4
QSFP28 Connector
Tx[4:1](p/n)
ModPrsL
LPMode/TxDis
IntL/RxLOSL
ResetL
ModSelL
SDA
SCL
Rx[4:1](p/n)
Low Speed Control

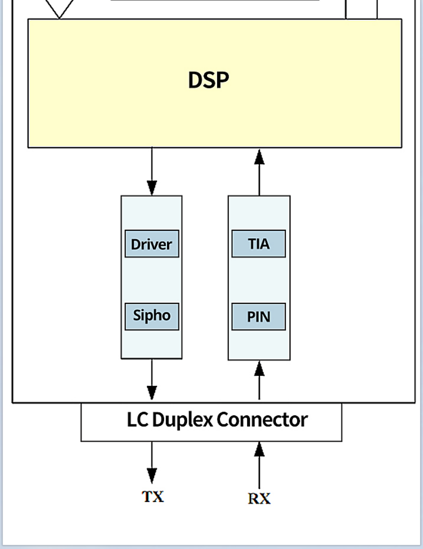
DSP
Driver
Sipho
TIA
PIN
LC Duplex Connector
TX
RX

	50G PAM4 DWDM Systems	100G PAM4 DWDM Systems	100G DWDM Coherent System
Parameters	2x50G PAM4	1x100G PAM4	Coherent DP -QPSK
Power Consumption	Around 5.5W (Win)	Around 5.5W (Win)	>20W
Form Factor	QSFP28	QSFP28	CFP2/CFP
Channel Spacing	50GHz	100GHz	50GHz
EDFA	Yes	Yes	Yes
DCM	Yes	Yes	No (Win)

RX OSNR Tolerance	Very low	Very low	High (Win)
Capacity	96x50G	48x100G	96x100G (Win)
Deployment Difficulty	Easy (Win)	Easy (Win)	Very Difficult
Maxmium Distance	80-120km	80-100km	80km++ (Win)
Cost in DCI Application	Low (Win)	Low (Win)	High (DCI BOX required)

Hot Products for 5G Fronthaul

For 5G fronthaul network, GIGALIGHT provides a series of 25G gray light optical transceivers with commercial and industrial options, which support both 25G Ethernet and CPRI/eCPRI. These products have been widely deployed in 5G fronthaul networks around the world.

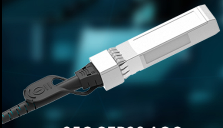

25G SFP28 AOC

Details

25G SFP28 SR

Details

25G SFP28 LR

Details

25G SFP28 BIDI LR

Details

*If you are interested in our products or solutions, please reply to the email directly to explain your needs, and our sales manager will get in touch with you as soon as possible!

Gigalight

Open Optical Network Device Explorer